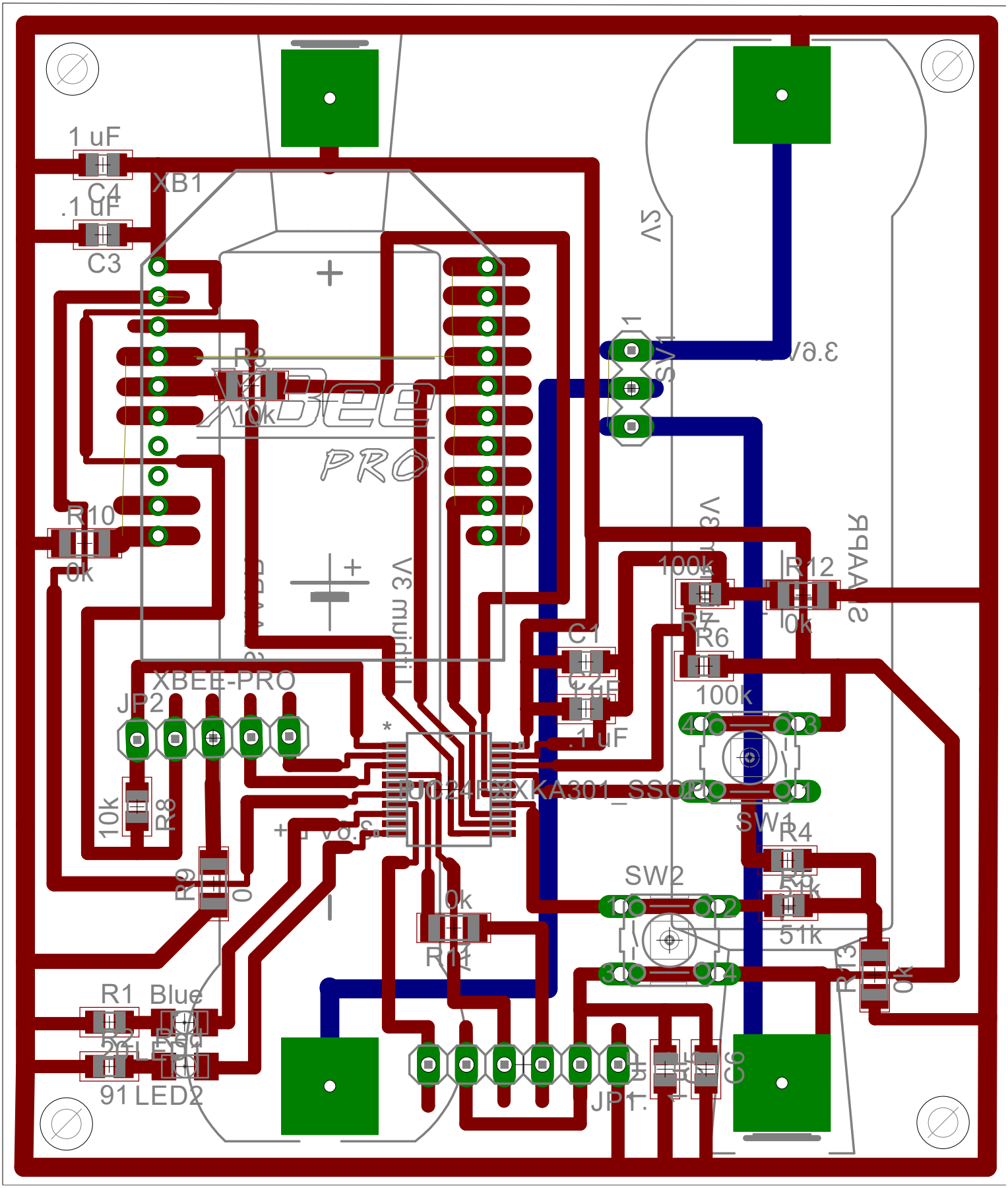

8/4/2016 1:23:52 PM f=3.00 C:\Users\John\Box Sync\Research\HARBOR\Hardware\FlightTracking\MiniBeacon\Mini Beacon Boa